F 013 167 14A

Stand ~~98-08~~
Issue 98-09-15

Fig./Abb. 1

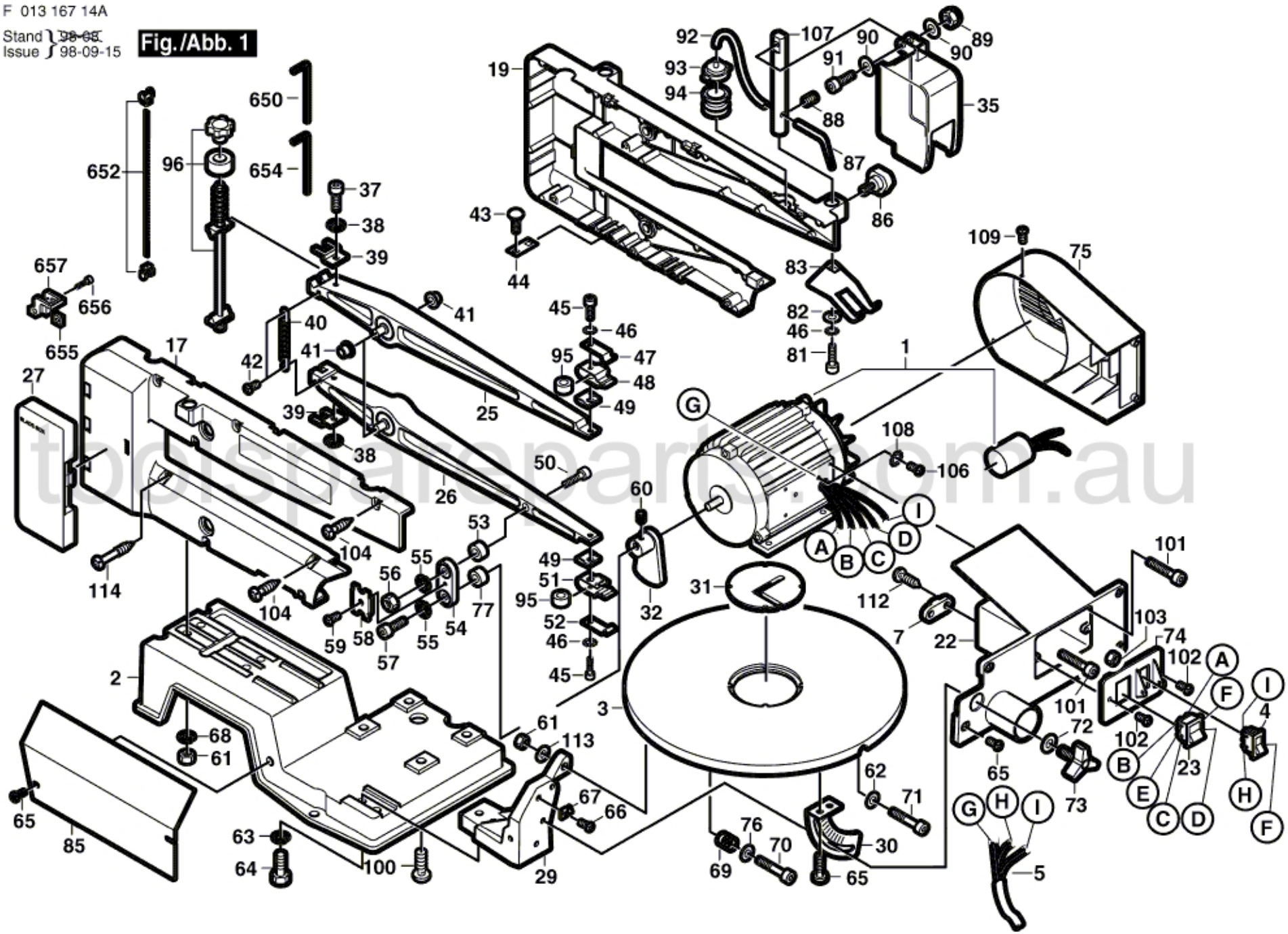

toolspareparts.com.au